慶應義塾大学学術情報リポジトリ
Keio Associated Repository of Academic resouces

Title	Genetic and environmental continuity and change of cognitive abilities between 42 and 60 months
Sub Title	
Author	藤澤, 啓子(Fujisawa, Keiko K.) 安藤, 寿康(Ando, Juko)
Publisher	Centre for Advanced Research on Logic and Sensibility The Global Centers of Excellence Program, Keio University
Publication year	2011
Jtitle	CARLS series of advanced study of logic and sensibility Vol.4, (2010.) ,p.153- 163
JaLC DOI	
Abstract	
Notes	Part 2 : Genetics and Development
Genre	Research Paper
URL	https://koara.lib.keio.ac.jp/xoonips/modules/xoonips/detail.php?koara_id=KO12002001-20110331-0153

慶應義塾大学学術情報リポジトリ(KOARA)に掲載されているコンテンツの著作権は、それぞれの著作者、学会または出版社/発行者に帰属し、その権利は著作権法によって保護されています。引用にあたっては、著作権法を遵守してご利用ください。

The copyrights of content available on the KeiO Associated Repository of Academic resources (KOARA) belong to the respective authors, academic societies, or publishers/issuers, and these rights are protected by the Japanese Copyright Act. When quoting the content, please follow the Japanese copyright act.

18 Genetic and Environmental Continuity and Change of Cognitive Abilities between 42 and 60 Months

Keiko K. Fujisawa[1] *and Juko Ando*[1]

[1] Department of Humanities & Social Science, Faculty of Letters, Keio University

Introduction

In order to investigate developmental trajectories of mental abilities, one of the best methodical ways is a longitudinal study which measures a target phenotype of a single person at at least two different time points. Compared to a cross-sectional study in which measurements are conducted for different time points (developmental stages) at a single point in time, a longitudinal study can capture data for an actual gain (or loss) of measure for a single person. From a behavioral genetic point of view, a longitudinal *twin* study is extremely interesting because it can reveal developmental *change*, as well as *stability*, of genetic and environmental influences on mental abilities.

Common sense usually tells us that genes are a cause of stability and environment is a cause of change. This, however, is untrue. Both genetic and environmental effects on both physical and psychological phenotypes change over time. For cognitive abilities, genetic influence increase through childhood to adolescence or even adulthood, whereas family (or "shared" in behavioral genetic term) environmental influence decreases, especially through early childhood to young adolescence (McGue and Bouchard, 1993; Plomin et al., 1997; Cardon, 1994 ; Bishop, et al., 2003).

We have been conducting a longitudinal twin study in early childhood for a few years. Fujisawa & Ando (2008) reported the preliminary result of

the first stage of measurement of the study. Fujisawa & Ando (2009) reported the results of two different time points independently (in a cross-sectional way) except for phenotypic correlation between 3.5 and 5 years of age and could not investigate developmental change and stability of genetic and environmental influences using longitudinal data set because of a lack of data containing both of two time points for a single subject.

The current study used a longitudinal dataset on twins reared together to investigate how Japanese children manifested dynamic changes in etiology of cognitive development from 3.5 to 5 years of age. We conducted a so-called "bivariate genetic analysis", which can reveal genetic and environmental change and stability at different two time points.

Method

Participants

Participants were twins living in the Tokyo area. The mean age of children was 3.56 years old (*SD* = 0.14) at the investigation of 42 months old and 5.21 years old (SD = 0.13) at the investigation of 60 months old. Numbers of twin pairs are shown in Table 1. There were 79 pairs (38 monozygotic (MZ) pairs, 41 dizygotic (DZ) pairs) who participated both the investigations at 42 months and 60 months. This number is more than twice as big as in our previous report (30 pairs in Fujisawa & Ando, 2009).

Table 1. *Numbers of pairs of twins.*

	42 months			60 months			42-60 months		
	MZ	DZ	Total	MZ	DZ	Total	MZ	DZ	Total
Female	33	32	65	32	27	59	20	18	38
Male	32	30	62	25	31	56	18	23	41
Total	65	62	127	57	58	115	38	41	79

Note. MZ: Monozygotic twins. DZ: Dizygotic twins.

Measures

Trained testers conducted the following evaluations on all children in a laboratory setting. Different tests were administered by different testers to each twin in order to avoid tester biases.

Cognitive functioning: Kaufman Assessment Battery for Children (K-ABC)

We conducted the K-ABC following the K-ABC Administration and Scoring Manual (Matsubara et al., 1993). We have reported elsewhere that our data have the same factor structure as that assumed by the K-ABC (i.e., sequential processing and simultaneous processing; see Fujisawa & Ando, 2008 for details). We used standard scores for the sequential scale, simultaneous processing scale and achievement scale.

Analyses

Bivariate genetic analyses for sequential processing, simultaneous processing, and achievement

We investigated the extent to which genetic and environmental factors account for change and stability of individual differences in sequential processing, simultaneous processing, and achievement scales. In our previous report (Fujisawa & Ando, 2009) we examined within-pair correlations for each measure and conducted *uni*variate genetic analyses for each measure separately. This analysis provides simple estimates of genetic (A), shared environmental(C), and nonshared environmental (E) contributions to given scores. Shared (common) environmental factors make children growing up in the same family similar, whereas nonshared (unique) environmental factors bring unique experiences to each child in the same family and yield differences among children in the same family (see Fujisawa & Ando, 2009 for details).

When longitudinal data containing two variables for a single phenotype measured at different two time points for each of subjects are available, a *bi*variate genetic analysis can be conducted. Figure 1 illustrates a full model of this analysis. A1 and A2 (circles) indicate latent genetic factors for two phenotypic variables (squares) measured at 42 and 60 months of age, respectively. The a_{11} path indicates a unique contribution of the genetic factor A11 to the phenotype at 42 months of age and the a_{22} indicates an independent genetic contribution of A2 to the phenotype at 60 months of age which provides genetic *change* for this phenotype. The path a_{21} is a genetic *continuity* between 42 and 60 months of age. If this path is statistically significant, the genetic factor for the phenotype at 42 months also affects the phenotype at 60 months [continuity model = full model]. If a_{21} is not statistically signifi-

cant, the genetic contributions for these two time points are independent with each other [independent model]. If a_{22} is not statistically significant, no novel genetic effect appears at 60 months of age and genetic influence at 60 months is completely explained by the genetic factor which appeared at 42 months of age [no novel genetic model]. A structural equation modeling (SEM) analysis can provide a goodness-of-fit indices for each model. This indicates the most plausible model under the given twin covariance data for these two time points. The same kinds of comparisons can be conducted for shared environment (C1 and C2), and nonshared environment (E1 and E2). The methodological details are shown in Neale & Cardon (1992).

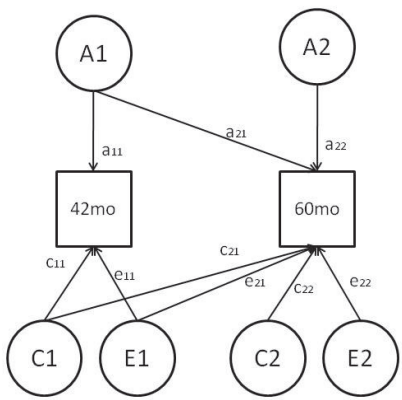

Figure 1. *Bivariate genetic analysis model (full model)*

Theoretically, 27 models (3 models for each of genetic, shared environmental, and nonshared environmental factors) are possible and can be compared. However, in order to reach an appropriate conclusion more effectively, we tried to find non significant paths in the full model by deleting the smallest paths step by step. We used Mx software (Neale, Boker, Xie & Maes, 2002) to conduct this SEM analysis.

Results

Descriptive statistics

Descriptive statistics of raw scores of each measure are shown in Table 2 and Table 3. There were not significant sex differences in each measure. Scores

of sequential processing and simultaneous processing did not significantly differ by zygosity, however, the achievement scores were higher for DZ than for MZ.

Table 2. *Means of measures (standard deviations are in parenthesis) by sex.*

Measures	Male	Female	
Sequential processing			
42 months	19.04 (5.26)	19.35 (4.31)	t=-.50, df=237, *ns*.
60 months	32.36 (7.69)	32.25 (7.07)	t=.12, df=241, *ns*.
Simultaneous processing			
42 months	30.15 (7.79)	31.22 (7.18)	t=-1.18, df=274, *ns*.
60 months	42.10 (9.24)	42.20 (7.13)	t=-.09, df=240, *ns*.
Achievement			
42 months	286.24 (46.56)	291.03 (34.80)	t=-.97, df=269, *ns*.
60 months	304.16 (47.92)	310.67 (34.10)	t=-1.22, df=241 *ns*.

Table 3. *Means of measures (standard deviations are in parenthesis) by zygosity.*

Measures	MZ	DZ	
Sequential processing			
42 months	19.10 (4.92)	19.30 (5.53)	t=-.315, df=215, *ns*.
60 months	32.76 (7.45)	32.03 (7.36)	t=.76, df=237, *ns*.
Simultaneous processing			
42 months	29.98 (7.89)	31.68 (7.21)	t=-1.78, df=250, *p=.077*
60 months	41.67 (8.11)	42.91 (8.27)	t=-1.16, df=236, *ns*.
Achievement			
42 months	282.62 (34.39)	295.00 (46.11)	t=-2.40, df=246, *p=.017*
60 months	301.23 (45.98)	314.62 (35.96)	t=-2.51, df=237, *p=013*

Concurrent and longitudinal correlations among measures

Concurrent and longitudinal correlations among measures are shown in Table 4. All correlations except for the longitudinal correlation between simultaneous processing scores at 42 months and achievement scores at 60 months were significant.

Table 4. *Concurrent and longitudinal correlations among measures.*

	SEQ 42	SIML 42	ACHV 42	SEQ 60	SIML 60
SIML 42	.30**	---			
ACHV 42	.45**	.48**	---		
SEQ 60	.46**	.11	.41**	---	
SIML 60	.18*	.34**	.33**	.45**	---
ACHV 60	.41**	.34**	.62**	.57**	.51**

Note. SEQ: sequential processing, SIML: simultaneous processing, ACHV: achievement. 42: 42 months, 60: 60 months. **: $p < .01$, *: $p < .05$

Within-pair and cross twin correlation

Table 5 shows within-pair correlations (diagonal) and cross correlations (off diagonal) for both kinds of twins. Diagonal MZ/DZ within-pair correlations indicate genetic and environmental contributions for each variable. A higher within-pair correlation for MZ twins than for DZ twins would indicate that genetic factors account more substantially for individual differences on a given measure. All within-pair correlations of MZ were higher than those of DZ, except for the within-pair correlation of achievement score. This suggests that genetic factors significantly affected the individual differences on the sequential and simultaneous processing scores at both 42 and 60 months and the achievement score at 42 months, while the shared environmental factors, rather than genetic factors, affected the individual differences in achievement at 60 months. Our previous study (Fujisawa & Ando, 2009) showed that there was no genetic contribution in sequential processing at 60 months, simultaneous processing at 42 months and achievement at 60 months. These discrepancies would be because of the sample size increase.

Table 5. *within pair cross correlations*

	SEQ42		SIML42		ACHIV42		SEQ60		SIML60		ACHIV60	
	MZ	DZ	MZ	DZ	MZ	DZ	MZ	DZ	MZ	DZ	MZ	DZ
SEQ42	0.51	0.15										
SIML42	0.34	0.27	0.66	0.41								
ACHIV42	0.52	0.38	0.46	0.34	0.72	0.57						
SEQ60	0.43	0.11	0.14	0.05	0.44	0.43	0.70	0.45				
SIML60	0.08	0.12	0.12	0.32	0.22	0.30	0.55	0.17	0.66	0.45		
ACHIV60	0.33	0.29	0.34	0.26	0.47	0.59	0.56	0.45	0.45	0.36	0.64	0.71

MZ/DZ cross correlations for each processing between different time

points are underlined in Table 5. A higher cross correlation for MZ twins than for DZ twins would also indicate that genetic factors account more substantially for stability between these two time points on a given measure. This table suggests genetic continuity only for sequential processing. In order to examine genetic and environmental continuity and change, we also conducted bivariate genetic analysis in the next section.

Bivariate genetic analysis and relative contribution of genetics and environment

Table 6 shows summary data for the results of bivariate genetic analysis.

For both sequential and simultaneous processing, genetic continuity with no novel genetic contribution at 60 months and independent nonshared environmental effect are suggested. There was an independent shared environmental contribution at 60 months for sequential processing and at 42 months for simultaneous processing.

For achievement, genetic factors showed effects only at 42 months of age but not appeared at 60 months. Shared environmental factors showed continuity between 42 and 60 months of age. Nonshared environmental factor showed both continuity and novel appearance at 60 months of age.

Table 6. *Results of bivariate genetic analyses; model selections (upper table) and estimated parameters under full model and the best fit model (lower table).*
Sequential processing

Model	-2LL	df	AIC
full	2835.49	445	1945.49
delete c11	2835.49	446	1943.49
delete c21	2835.49	447	1941.49
delete a22	2836.47	448	1940.47
delete e21	**2837.78**	**449**	**193 9.78**

	a		c		e	
full model	42mo	60mo	42mo	60mo	42mo	60mo
42mo	3.44		0.00		3.45	
95%CI	(.38-4.28)		(0.00-3.24)		(2.87-4.20)	
60mo	3.54	3.54	1.52	3.29	1.35	3.84
95%CI	(0.00-6.58)	(0.00-5.99	(0.00-5.71)	(0.00-5.57)	(0.00-2.80)	(3.11-4.72)
best fit model	42mo	60mo	42mo	60mo	42mo	60mo
42mo	3.53		--		3.37	
95%CI	(2.64-4.34)				(2.83-4.04)	
60mo	4.65		--	4.20	--	4.06
95%CI	(3.23-6.05)			(2.54-5.47)		(3.47-4.78)

Simultaneous processing

Model	-2LL	df	AIC
full	3301.05	479	2343.05
delete e21	3302.31	480	2342.31
delete c21	3302.33	481	2340.33
delete a22	3302.55	482	2338.55
delete c22	**3303.9**	**483**	**2337.9**

	a		c		e	
full model	42mo	60mo	42mo	60mo	42mo	60mo
42mo	4.59		3.99		4.54	
95%CI	(0.00-6.89)		(0.00-6.30)		(3.85-5.44)	
60mo	2.95	4.79	1.44	3.44	0.91	4.61
95%CI	(0.00-7.54)	(0.00-7.03	(0.00-6.16)	(0.00-6.09)	(0.00-2.44)	(3.89-5.56)
best fit model	42mo	60mo	42mo	60mo	42mo	60mo
42mo	3.44		4.99		4.67	
95%CI	(2.01-4.79)		(3.91-6.12)		(4.05-5.41)	
60mo	6.80	--	--	--	--	4.58
95%CI	(5.76-7.91)					(3.91-5.44)

Achievement

Model	-2LL	df	AIC
full	4805.73	476	3853.73
delete a22	4805.73	477	3851.73
delete a21	4807.42	478	3851.42
delete c22	**4807.42**	**479**	**3849.42**

	a		c		e	
full model	42mo	60mo	42mo	60mo	42mo	60mo
42mo	30.59		20.14		18.7	
95%CI	(20.66-37.75)		(6.68-30.02)		(15.67-22.77)	
60mo	8	0	34.62	0	9.51	21.74
95%CI	(0.00-20.09)	(0.00-14.90	(0.00-40.89)	(0.00-20.48)	(1.64-16.22)	(18.28-25.41)
best fit model	42mo	60mo	42mo	60mo	42mo	60mo
42mo	26.51		24.31		19.59	
95%CI	(20.47-32.02)		(17.35-31.15)		(16.44-23.58)	
60mo	--	--	35.06	--	11.01	21.23
95%CI			(29.85-41.09)		(3.80-17.12)	(17.79-24.96)

Note: Best fit models are indicated by bold letters. a: path estimates of genetic factors (a11, a21, and a22). c: path estimates of shared environmental factors (c11, c21, and c22). e: path estimates of nonshared environmental factors (e11, e21, and e22). 95% confidential intervals were shown in parentheses.

Under the best fit models, the relative contribution of genetic (A), shared environmental (C) and nonshared environmental (E) factors for each time point on sequential processing (a), simultaneous processing (b) and achievement (c) scores.

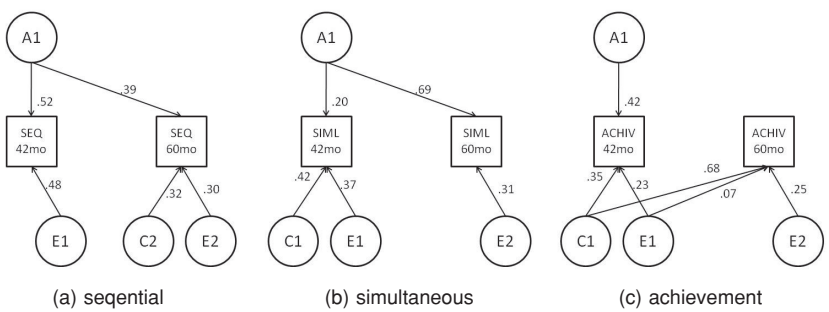

(a) seqential (b) simultaneous (c) achievement

Figure 2. Relative contribution of genetic (A), shared environmental (C) and nonshared environmental (E) factors for each time point.

Discussion

This study shows that genetic and environmental effects change from 42 to 60 months of age. For sequential processing and achievement, genetic factor

contributed to developmental continuity. Genetic influence decreased for sequential processing and increased for simultaneous processing. On the other hand, for achievement, the genetic effects disappeared and shared environmental effect increased from 42 to 60 months. This heterogeneous result may be because of difference of cognitive processing functions between sequential/simultaneous processing and achievement. Sequential and simultaneous processing are similar to fluid ability, whereas achievement is a kind of crystallized ability (Horn and Cattell, 1966). Genetic and environmental relationship among these three abilities should be investigated.

Acknowledgement

We would like to thank children and their parents for participating in this project. Special thanks to Mari Nozaki, Ayano Kokubo, Megumi Abe, Aya Fujisawa, Hatsuko Yamada, Ayumi Nukita, Yoko Matsumura, Megumi Hashimoto, Hiromi Watabe, Yuko Yoshida, Midori Emoto, Aki Uchida, Kumiko Hagiya, Rina Akagi, Yoko Kudo, Manami Massaki, Yoshimi Shingae, Yuko Fujunuma, Yuko Yokota, and Mayumi Takagi for their extensive cooperation for data collection.

References

Bishop, E. G., Cherney, S. S., Corley R., Plomin, R., DeFries, J. C. Hewitt, J. K (2003) Development genetic analysis of general cognitive ability from 1 to 12 years in a sample of adoptees, biological siblings, and twins. Intelligence, 31, 31–49.

Cardon, L.R. (1994b). Specific cognitive abilities. In J.C. DeFries, R. Plomin, & D.W. Fulker (Eds.), Nature and nurture during middle childhood (pp. 57–76). Oxford: Blackwell.

Fujisawa, K. K. & Ando, J. (2009) Behavior genetic analysis for cognitive development in early childhood: Comparisons between 42 and 60 months. In CARLS CARLS series of advanced study of logic and sensibility (Vol. 3) Pp.121–130.

Fujisawa, K. K. & Ando, J. (2008) A twin study of logic and sensibility inearly childhood: Findings from univariate behavior genetic analysis. In CARLS CARLS series of advanced study of logic and sensibility (Vol. 2) Pp.173–181.

Fulker, D.W., Cherny, S.S., & Cardon, L.R. (1993). Continuity and change in cognitive development. In R. Plomin & G.E. McClearn (Eds.), Nature, nurture, and psychology (pp. 77–97). Washington, DC: Psychological Association.

Horn,J.L.,& Cattell,R.B. (1966). Refinement and test of the theory of fluid and crystallized intelligence. *Journal of Educational Psychology, 57, pp.253–270.*

Kaufman, A. S., & Kaufman, N. L. (1983). *Kaufman Assessment Battery for Children.*

Matsubara, H., Fujita, K., Maekawa, H., & Ishikuma, T., (1993). *Japanese Kaufman Assessment Battery for Children.* Maruzen, Japan.

*McGue, M., Bouchard, T.J.Jr., Iacono, W.G. & Lykken, D.T. (1993) Behavioral genetics of cognitive ability: A lifespan perspective. In R.Plomin & G.E.McClearn (Eds.) *Nature*, *nurture*, *and psychology*. Washington: APA.

Neale, M. C., & Cardon, L. R. (1992). *Methodology for genetic studies of twins and families.* Dordrecht, the Netherlands: Kluwer.

Neale, M. C., Boker, S. M., Xie, G., & Maes, H. H. (2002). *Mx: Statistical modeling* (6th ed.). Richmond, VA: Virginia Commonwealth University, Department of Psychiatry.

*Plomin, R., Fulker, D.W., Corley, R., & DeFries, J.C. (1997). Nature, nurture and cognitive development from 1 to 16 years: A parent-offspring adoption study. Psychological Science, 8, 442–447.